Instructions-Parts

High Pressure Equipment
Sprague® Products

PT2020 Programmable Pneumatic Pump Controller

3A6828B
EN

For controlling pneumatic intensifier pumps used for proof pressure testing. For professional use only.

Not approved for use in explosive atmospheres or hazardous locations.

See page 4 for model information.

Important Safety Instructions

Read all warnings and instructions in this manual, and other related manuals on page 3, before using the equipment. Save all instructions.

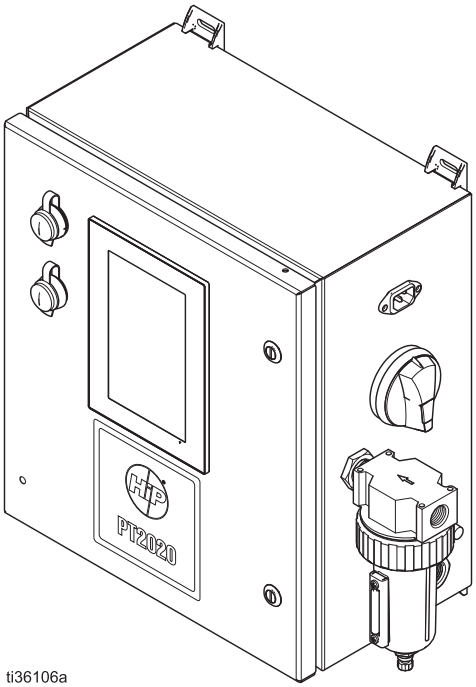

ti36106a

PROVEN QUALITY. LEADING TECHNOLOGY.

Contents

Models and Approvals

PT2020 Controller Models (Part number includes enclosure, transducer, and cord set)	Transducer Pressure, in ksi (kilopound/in^2)	Cord Set	Controller with Cord Set & Transducer Only Approvals	Enclosure (PN 26C600) Only Approvals
25N950	10	US	N/A	c UL US LISTED Conforms to UL STD 508A Certified CSA STDS C22.2 No. 14
25N951	25	US		
25N952	40	US		
25N953	60	US		
25N954	75	US		
25D815	10	UK	CE	
25D816	25	UK		
25D817	40	UK		
25D818	60	UK		
25D819	75	UK		
25D820	10	EU		
25D821	25	EU		
25D822	40	EU		
25D823	60	EU		
25D824	75	EU		
25D825	10	AU	CE	
25D826	25	AU		
25D827	40	AU		
25D828	60	AU		
25D829	75	AU		

Warnings

The following warnings are for the setup, use, grounding, maintenance, and repair of this equipment. The exclamation point symbol alerts you to a general warning and the hazard symbols refer to procedure-specific risks. When these symbols appear in the body of this manual or on warning labels, refer back to these Warnings. Product-specific hazard symbols and warnings not covered in this section may appear throughout the body of this manual where applicable.

⚠ WARNING

FIRE AND EXPLOSION HAZARD

When flammable fluids are present in the work area, such as gasoline and windshield wiper fluid, be aware that flammable fumes can ignite or explode. To help prevent fire and explosion:

- Use equipment only in well-ventilated area.
- Eliminate all ignition sources, such as cigarettes and portable electric lamps.
- Ground all equipment in the work area.
- Keep work area free of debris, including rags and spilled or open containers of solvent and gasoline.
- Do not plug or unplug power cords or turn lights on or off when flammable fumes are present.
- Use only grounded hoses.
- **Stop operation immediately** if static sparking occurs or you feel a shock. Do not use equipment until you identify and correct the problem.
- Keep a working fire extinguisher in the work area.

ELECTRIC SHOCK HAZARD

his equipment must be grounded. Improper grounding, setup, or usage of the system can cause electric shock.

- Turn off and disconnect power cord before servicing equipment.
- Connect only to grounded electrical outlets.
- Use only 3-wire extension cords.
- Ensure ground prongs are intact on power and extension cords.
- Do not expose to rain. Store indoors.

SKIN INJECTION HAZARD

High-pressure fluid from dispensing device, hose leaks, or ruptured components will pierce skin. This may look like just a cut, but it is a serious injury that can result in amputation. **Get immediate surgical treatment.**

- Do not point dispensing device at anyone or at any part of the body.
- Do not put your hand over the fluid outlet.
- Do not stop or deflect leaks with your hand, body, glove, or rag.
- Follow the **Pressure Relief Procedure** when you stop dispensing and before cleaning, checking, or servicing equipment.
- Tighten all fluid connections before operating the equipment.
- Check hoses and couplings daily. Replace worn or damaged parts immediately.

⚠WARNING

EQUIPMENT MISUSE HAZARD

Misuse can cause death or serious injury.

- Do not operate the unit when fatigued or under the influence of drugs or alcohol.
- Do not exceed the maximum working pressure or temperature rating of the lowest rated system component. See **Technical Specifications** in all equipment manuals.
- Use fluids and solvents that are compatible with equipment wetted parts. See **Technical Specifications** in all equipment manuals. Read fluid and solvent manufacturer's warnings. For complete information about your material, request Safety Data Sheets (SDSs) from distributor or retailer.
- Do not leave the work area while equipment is energized or under pressure.
- Turn off all equipment and follow the **Pressure Relief Procedure** when equipment is not in use.
- Check equipment daily. Repair or replace worn or damaged parts immediately with genuine manufacturer's replacement parts only.
- Do not alter or modify equipment. Alterations or modifications may void agency approvals and create safety hazards.
- Make sure all equipment is rated and approved for the environment in which you are using it.
- Use equipment only for its intended purpose. Call your distributor for information.
- Route hoses and cables away from traffic areas, sharp edges, moving parts, and hot surfaces.
- Do not kink or over bend hoses or use hoses to pull equipment.
- Keep children and animals away from work area.
- Comply with all applicable safety regulations.

PERSONAL PROTECTIVE EQUIPMENT

Wear appropriate protective equipment when in the work area to help prevent serious injury, including eye injury, hearing loss, inhalation of toxic fumes, and burns. Protective equipment includes but is not limited to:

- Protective eyewear, and hearing protection.
- Respirators, protective clothing, and gloves as recommended by the fluid and solvent manufacturer.

Installation

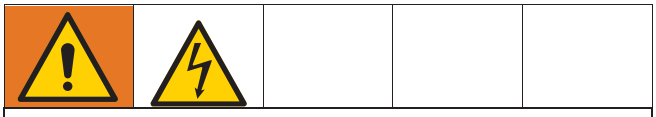

All electrical wiring must be done by a qualified electrician and comply with all local codes and regulations.

Grounding

The equipment must be grounded to reduce the risk of static sparking and electric shock. Electric or static sparking can cause fumes to ignite or explode. Improper grounding can cause electric shock. Grounding provides an escape wire for the electric current.

Enclosure, controller, and transducer: grounded through the power cord. Do not modify the plug provided; if it does not fit the outlet, have the proper outlet installed by a qualified electrician.

Pump: refer to your pump's instruction manual.

Air and fluid hoses: use only electrically conductive hoses.

Air compressor: follow manufacturer's recommendations.

Fluid supply container: follow local code.

Mounting the Enclosure

1. See **Typical Installation**, on page 8, for location of the enclosure relative to the pneumatic intensifier pump.
2. See **Dimensions**, on page 31, to determine the size of the flat surface needed for the enclosure.
3. Use the slots in the mounting feet (27) (see **Parts**, on page 29) or the **Dimensions**, on page 31, to drill holes in the mounting surface for customer-supplied mounting screws.

Connecting the Transducer

1. Follow the **Pressure Relief Procedure** on page 11.
2. Turn the disconnect switch (8) to the OFF position. (See FIG. 2 on page 9.)
3. Attach the transducer (S) close to the pump's outlet port (M). (See FIG. 1 on page 8.)
4. Connect the transducer cable (R) from the transducer connection (10) to the transducer (S).
5. Turn the disconnect switch (8) to the ON position.

Updating the Software

The PT2020 has a USB port on the front cover for updating the software, and for importing and exporting data.

NOTE: Settings and pressure test data may be lost when updating software. See **File Management**, on page 24, for saving and restoring settings and pressure test data.

Getting the Software

1. Contact HiP customer assistance for the latest software.
2. Move the “Default_PPC7x” folder and “arnbcfg.xml” file to the root directory of a USB drive.

Installing the Software

1. Follow the **Pressure Relief Procedure** on page 11.
2. Turn the disconnect switch to the OFF position. (See FIG. 1 on page 8.)
3. Insert the USB drive with the new software into the USB port on the front cover of the enclosure. (See FIG. 1 on page 8.)
4. Turn the disconnect switch to the ON position.
5. Wait for the PT2020 to update. Updates can take up to five minutes. Do not turn the system off during the update, as this can prevent the unit from operating. The Home screen will appear once the update is complete.
6. Turn the disconnect switch to the OFF position.
7. Remove the USB drive.

Typical Installation

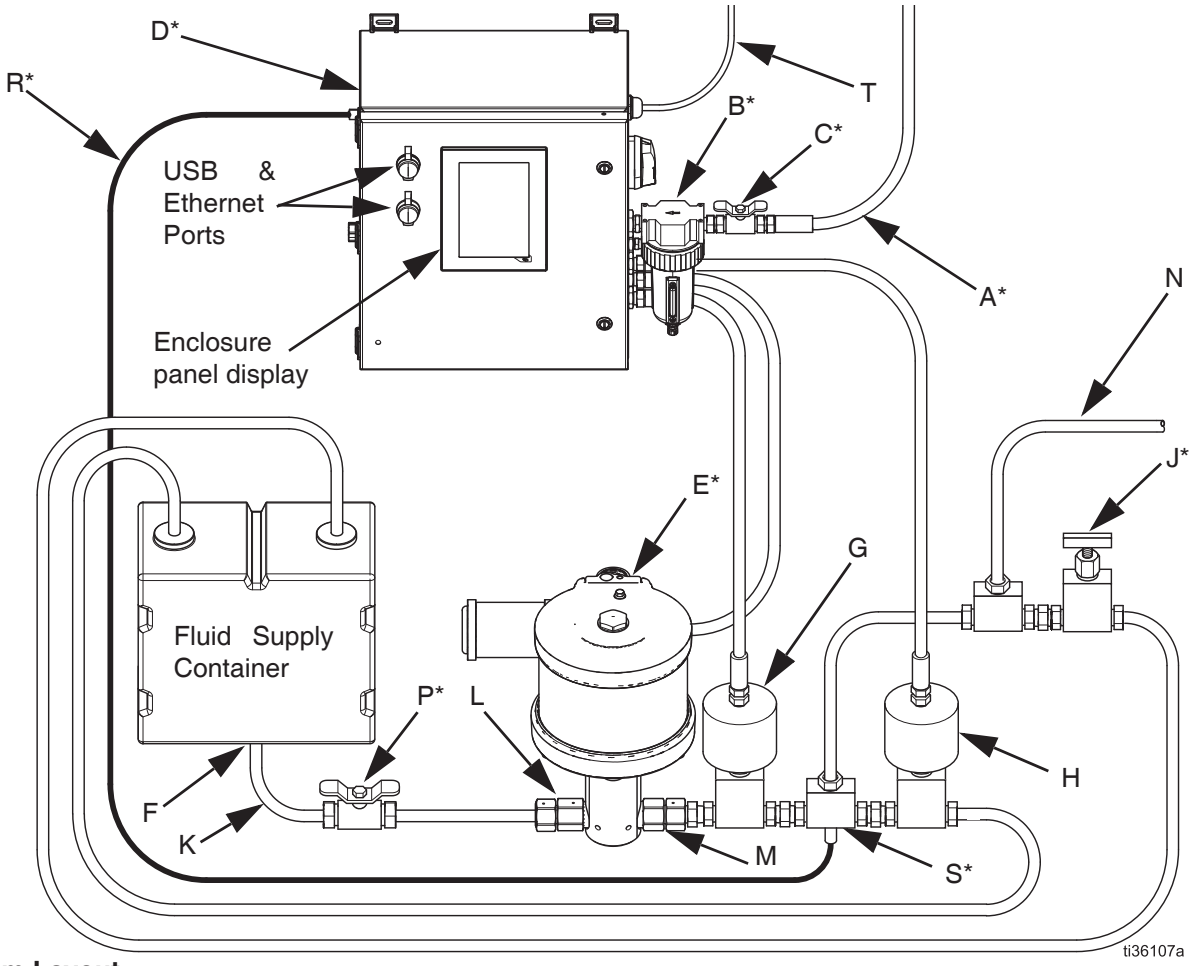

FIG. 1: System Layout

FIG. 1 is an example of enclosure installation with a pressure test system. Your installation may differ from what is shown here.

Components Supplied by HiP

The following components, see FIG. 1, are supplied by HiP:

B	Pneumatic Filter*
D	PT2020 Controller*
R	Transducer Cable*
S	Transducer*
T	Power Cord*
*	Required component

Additional Modular System Components

The following components, see FIG. 1, are available from HiP or supplied by the customer:

A	Main Pneumatic Supply Line*
C	Bleed-type Master Pneumatic Valve*
E	Pump*
F	Strainer (at the fluid supply container)
G	Isolation Valve (PT2020-controlled)
H	Pressure Release Valve (PT2020-controlled)
J	Fluid Pressure Relief Valve*
K	Fluid Inlet Line
L	Inlet Port
M	Outlet Port
N	Fluid Outlet Line to Hydraulic System
P	Supply Fluid Shutoff Valve*
*	Required component

Enclosure Components

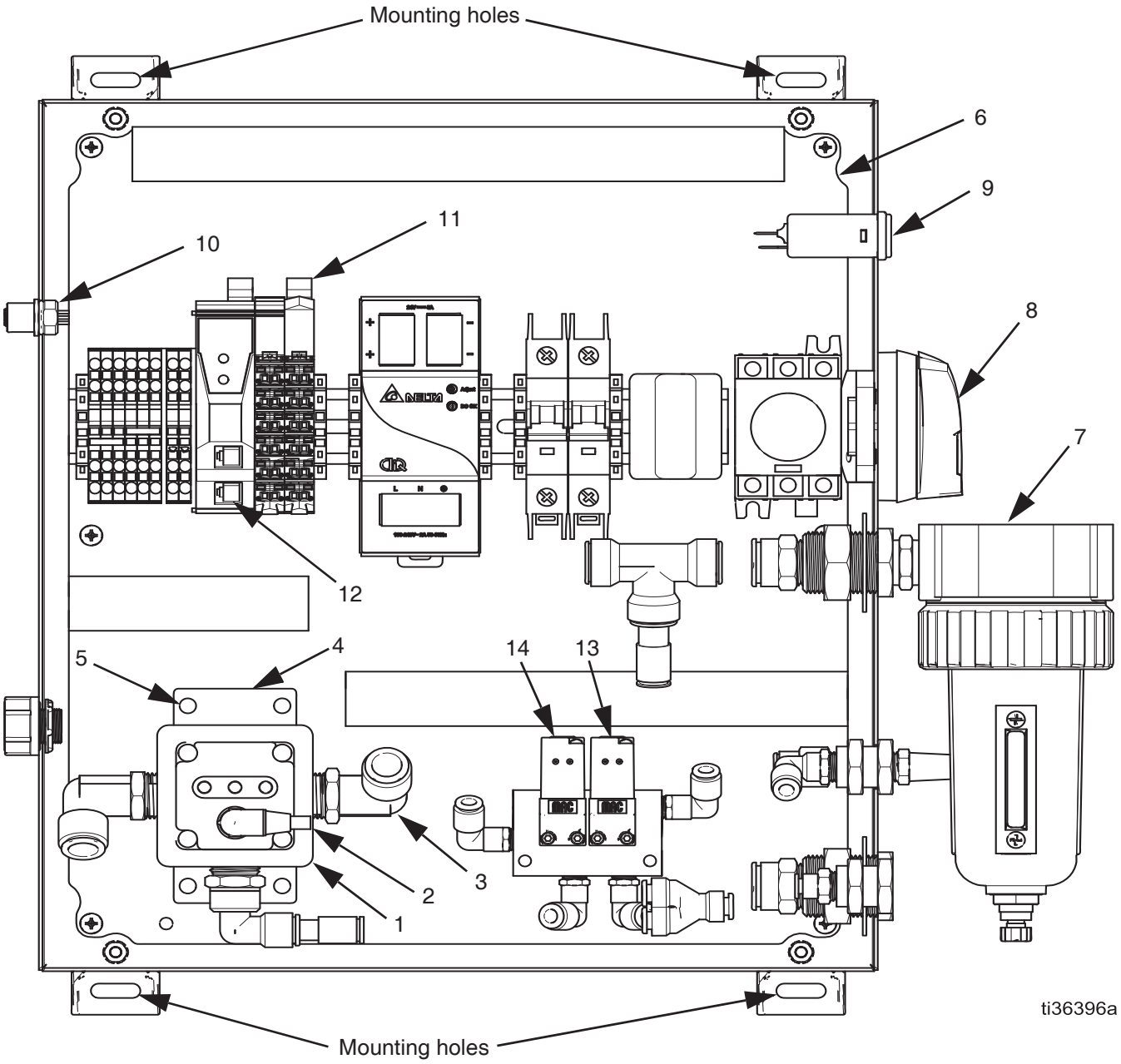

FIG. 2: Enclosure Components

1 Electronic regulator
2 M12 cable connection
3 Pneumatic hose connection
4 Regulator base
5 Base screws
6 Backplate
7 Filter
8 Disconnect switch
9 Power cable connection
10 Pressure transducer connection
11 I/O cards
12 Ethernet connections
13 Isolate valve air solenoid
14 Pressure release valve air solenoid

Wiring Diagram

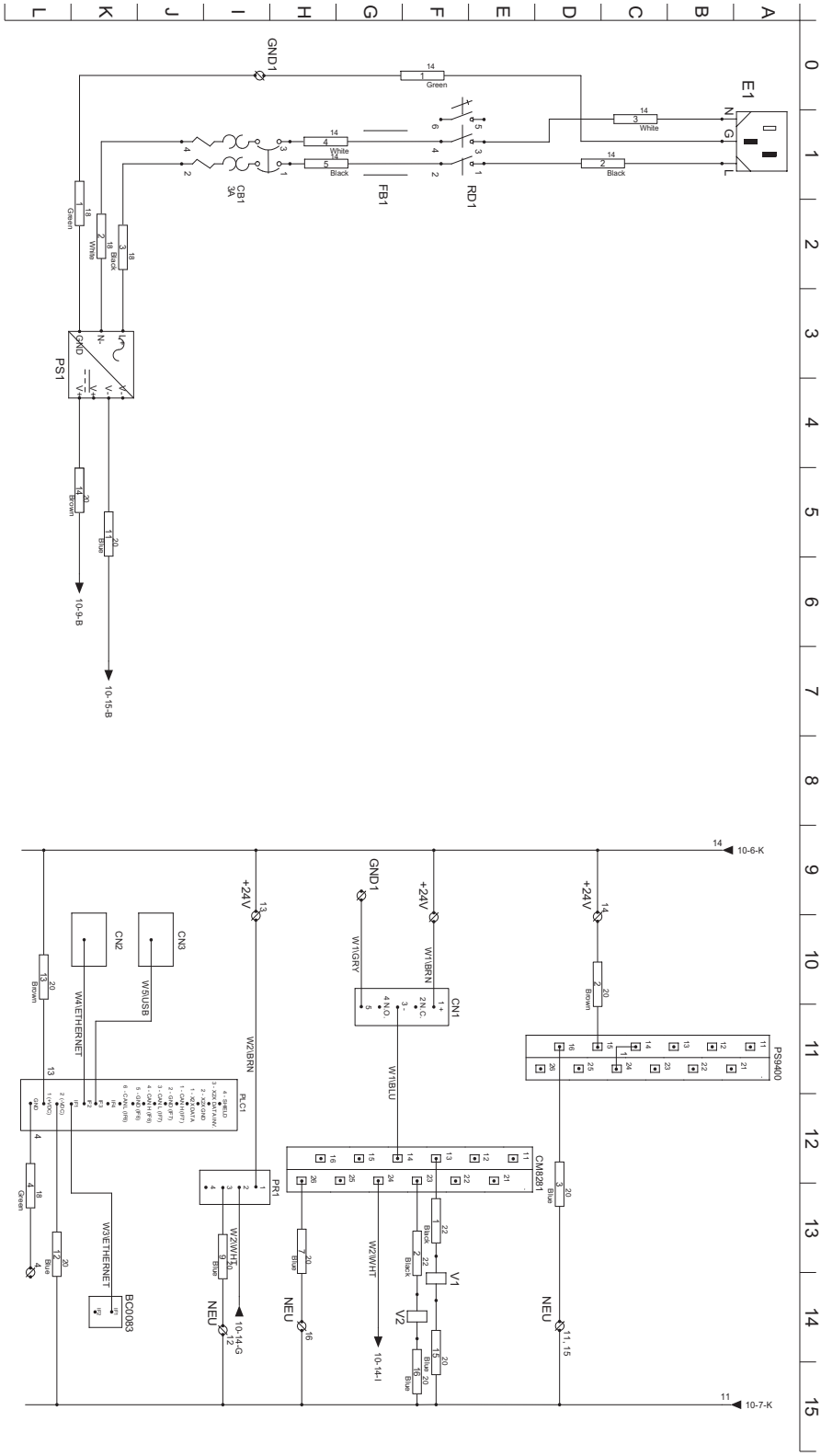

FIG. 3: Wiring Diagram

Operation

Pressure Relief Procedure

Follow the Pressure Relief Procedure whenever you see this symbol.

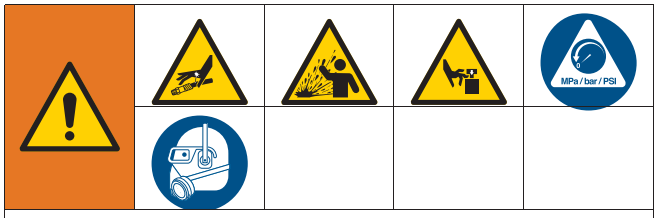

This equipment stays pressurized until pressure is manually relieved. To help prevent serious injury from pressurized fluid, such as skin injection, splashing fluid and moving parts, follow the Pressure Relief Procedure when you are finished operating the pump, and before cleaning, checking, or servicing the equipment.

1. Press the Stop button on the controller display to ensure the PT2020 controller is in an Off state.
2. Close the master pneumatic valve (C).
3. Close the fluid supply valve (P).
4. Bleed the pressure by opening the user-supplied fluid pressure relief valve (J).

Controller Operation

Navigation

Screen Buttons

Screen buttons allow you to access any of the three primary screens from anywhere in the system. With the exception of the Settings button, all screen buttons are available from any screen.

Home - Press from any other screen to return to the Home screen.

Run - Press to display the Run screen (see page 23), where you can select and run any pre-configured tests (see page 14).

Settings - Press to display the Setup screen (see page 16), where you can select Transducer, Pump, Units, Pressure Tests, and System Settings for configuration. This is also where you can access the Alarm Log and File Management.

This button will not be available while the pump is running.

Action Buttons

Stop - Press to stop the pump, bleed the air pressure to the pump to 0 PSI.

Forward - This button is used on the Setup screens and indicates another screen is available for the corresponding selection. Press this button to display related screen.

Back - Press to return to the previous screen. Any changes to the current screen will be saved.

Toggle - Press to toggle between Off (white background) and On (green background).

Entry Fields

Menu - Select to display a list of menu options.

Field - Select to display an alphanumeric or numeric keypad. See **Data Field Keypads**.

Data Field Keypads

Selecting a data field will display either an alphanumeric or numeric keypad, depending on whether the field is primarily for text or numbers. Common features include a backspace key (next to the entry display), a save key (the check mark), and a cancel key (a circle with an “X”).

Alphanumeric Keypad

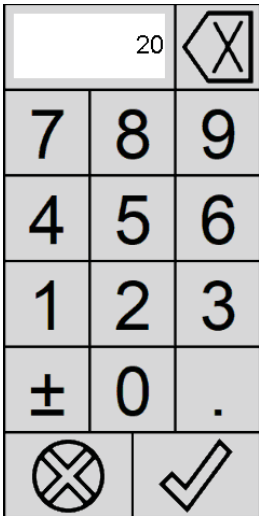

Numeric Keypad

FIG. 4

Logging In

The Startup screen is displayed when the PT2020 controller is first turned on or when the Logout button is pressed.

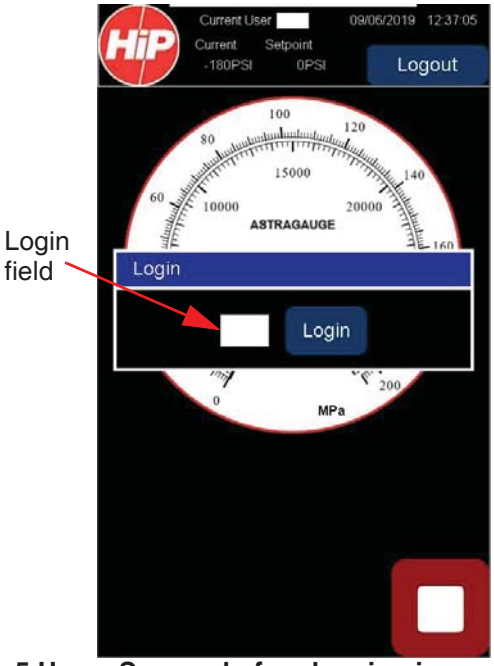

FIG. 5 Home Screen, before logging in

1. Select the blank Login field to display an alphanumeric keypad.
2. Enter the login code (up to three characters). The login code is used to track who is running the pressure tests. It appears in the Current User field at the top of the screens.
3. Press the Login button to display the Home screen without the Login dialog box.

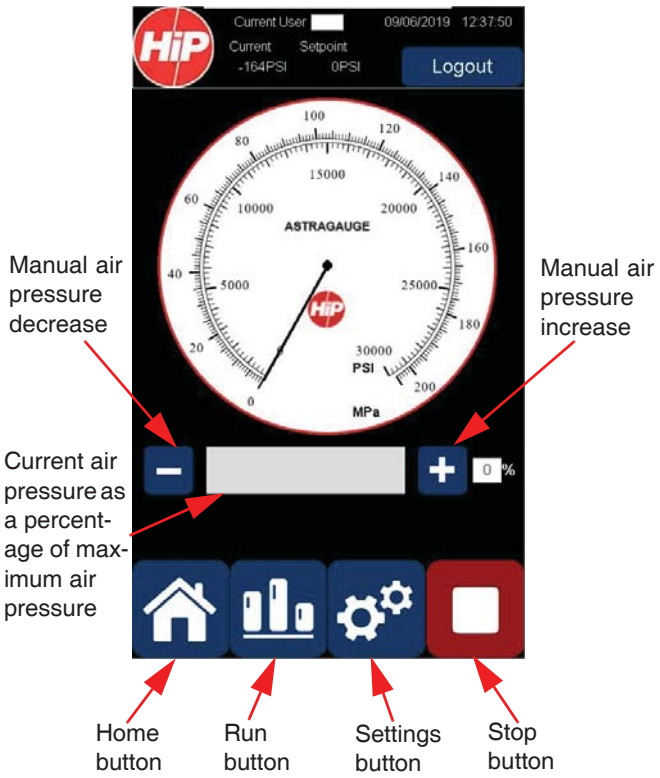

FIG. 6 Home Screen, after logging in

Logging Out

Press the Logout button on the Home screen.

Setting Pressure Units

The pressure units (PSI, BAR, or MPa) set on the Units screen are used throughout all of the PT2020 controller screens, unless otherwise noted.

1. Press the Settings button to display the Setup screen.

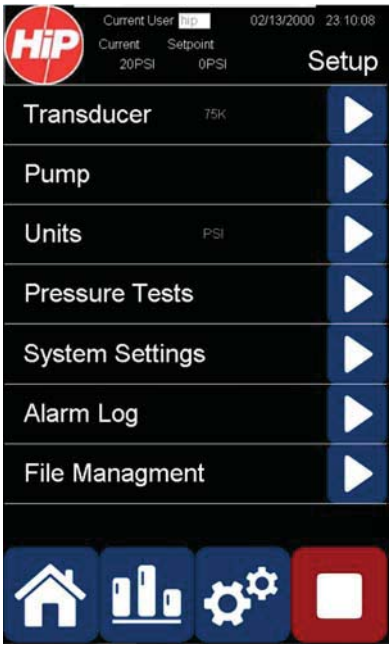

FIG. 7 Setup Screen

2. Select Units to display the Units screen.

FIG. 8 Units Screen

3. Press the toggle button next to the appropriate pressure unit.

Setting Up the Transducer

Selecting a Transducer

The following steps assume you have already installed a Graco-supplied pressure transducer.

1. Press the Settings button to display the Setup screen.
2. Select Transducer to display the Transducer screen.

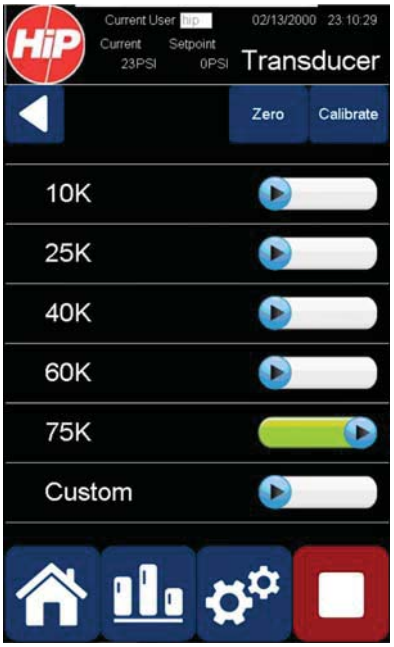

FIG. 9 Transducer Screen

3. Press the toggle button next to the maximum pressure (in PSI) rated for your transducer.

NOTE: For non-Graco-supplied transducers, or other custom 4-20 mA transducers, select Custom to display the Custom screen, and enter the Max Transducer Pressure rated for the transducer.

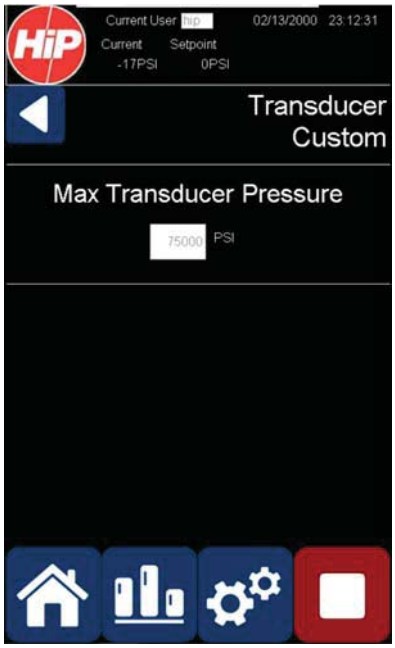

FIG. 10 Transducer Custom Screen

Zeroing the Transducer

Graco-supplied pressure transducers will not be calibrated, and will need to be zeroed before running pressure tests. Zeroing a non-calibrated transducer effectively sets the low pressure setting of the transducer to 0 PSI within the system.

1. After **Selecting a Transducer** (on page 15), press the Stop button and perform the **Pressure Relief Procedure** on page 11.

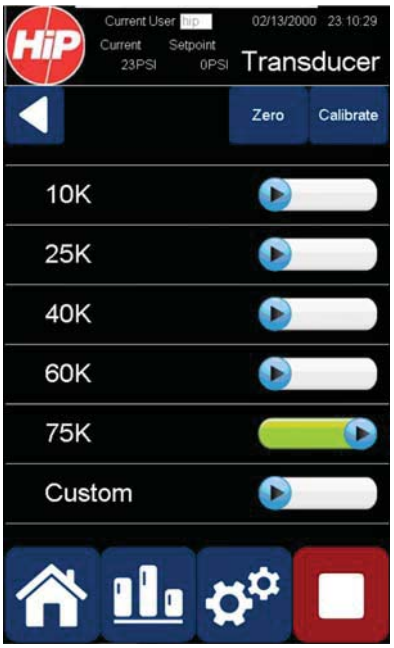

FIG. 11 Transducer Screen

2. With 0 PSI in the system, press the Zero button on the Transducer screen.

Calibrating the Transducer

Calibrated pressure transducers do not need to be zeroed, but their calibration parameters will need to be entered the Calibration screen.

1. After **Selecting a Transducer** (on page 15), press the Stop button and perform the **Pressure Relief Procedure** on page 11.

2. With 0 PSI in the system, press the Calibrate button on the Transducer screen after **Selecting a Transducer** to display the Calibration screen.

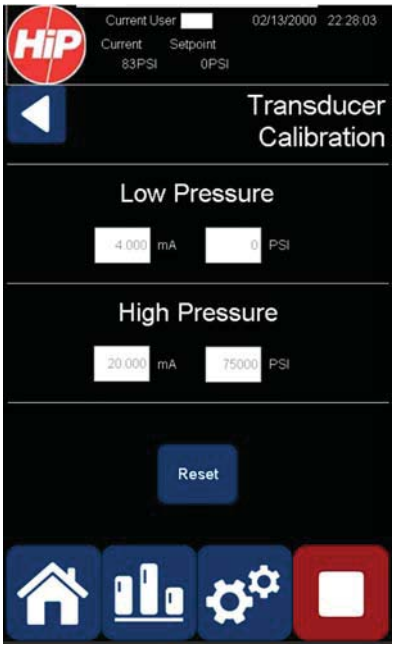

FIG. 12 Transducer Calibration Screen

3. Select the Low Pressure and High Pressure fields, in turn, and enter the calibration parameters (both mA and PSI) from the transducer calibration sheet.

NOTE: The Reset button will reset all fields on the Calibration screen to default values.

Setting Up the Pump

The following steps assume you have already connected a pump to the PT2020 controller. The parameters on the Pump screen are used to calculate the pump ratio, which is based on the Max Fluid Pressure Rating and the Max Air Pressure Rating. The Pump Ratio cannot be directly entered.

To reduce the risk of skin injection and damage to the pump, ensure the user-supplied pressure relief valve (J) is set at or below the maximum working pressure of the pump. Refer to your pump's instruction manual for specifics.

1. Press the Settings  button to display the Setup screen.
2. Select Pump to display the Pump screen.

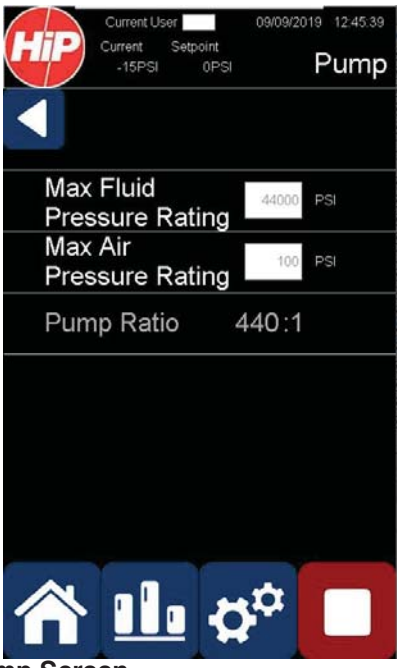

FIG. 13 Pump Screen

3. Select the Max Fluid Pressure Rating field and use the keypad to enter the maximum pressure of the connected pump. This is typically noted in the pump's instruction manual as the maximum working pressure.
4. Press the Save button on the keypad to save the pump pressure.
5. Select the Max Air Pressure Rating field and use the keypad to enter the maximum air pressure for the connected pump. This is the maximum air pressure that the pump can handle, and is typically noted on the pump or in the pump's instruction manual.
6. Press the Save button on the keypad to save the air supply pressure.

Setting Up Pressure Tests

Creating a New Test

1. Press the Settings button to display the Setup screen.
2. Select Pressure Tests to display the Tests screen.
3. Press the New Test button to display a Pressure Test Setpoint Overview screen with a blank Name field. Each pressure test has it's own Overview screen.

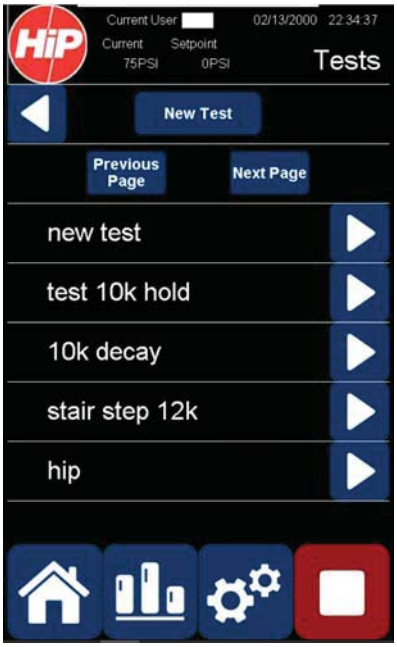

FIG. 14 Tests Screen

4. Select the Name field and use the keypad to enter the name of the new pressure test. Press the Save button next to the Name field. The Tests screen reappears with the name of the new test added to the list of tests.

FIG. 15 Test Setpoint Overview Screen

5. Select the desired test from the test list to redisplay the Pressure Test Setpoint Overview screen for that test.

6. Press the New Setpoint button to display the Setpoint screen. You can set up to 30 setpoints for each pressure test.

FIG. 16 Setpoint Screen

7. Enter the pressure for the setpoint in the Pressure field.

8. In the Time field, enter the time for the setpoint to be held or monitored before moving on to the next setpoint or ending the pressure test.

9. Select one of the following Setpoint Types from the menu list:

   - **Hold** - This maintains the setpoint pressure for the duration entered in the Time field. Air pressure is maintained on the pump.

   - **Decay** - This builds pressure up to the setpoint pressure before starting a pressure decay test. The pressure will overshoot the setpoint during buildup to ensure the decay starts at the actual setpoint. The pressure decay will be measured over the duration entered in the Time field. Once the decay is started, air pressure is removed from the pump.

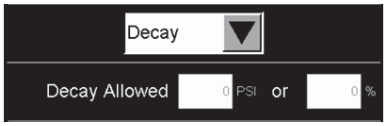

FIG. 17 Decay Fields

The Decay Allowed field is the maximum pressure decay allowed below the setpoint. An alarmed is tripped if the actual decay exceeds the entered value. The percent value will automatically change with the amount entered, and vice versa.

   - **Interact** - This builds pressure up to the setpoint pressure and holds for interaction by the operator. A popup window reminds the operator that manual interaction is required for the test to continue. Examples include actuating a valve or checking for leaks.

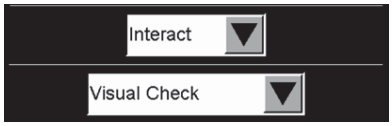

FIG. 18 Interaction Fields

The Interaction Type menu list includes two popup window options: Visual Check and Manual Operation.

10. In the Stabilize Time field, enter the duration for the system to wait and “settle” at the setpoint pressure before starting the actual test.

NOTE: The Delete Setpoint button will delete the current setpoint from the test.

Setting Up the System

1. Press the Settings button to display the Setup screen.
2. Select System Settings to display the System screen.

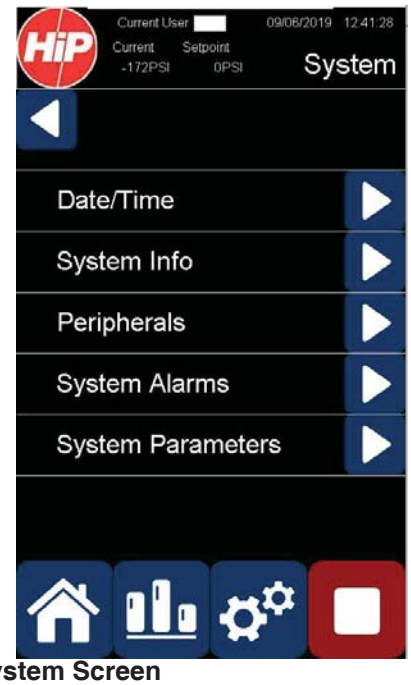

FIG. 19 System Screen

Setting Date and Time

1. Select Date/Time on the System screen to display the System Date/Time screen.

FIG. 20 System Date/Time Screen

2. Enter the current date in the Date fields.
3. Enter the current time (in 24-hr format) in the Time fields.
4. Press the Back button to return to the System screen.

Verifying the System Information

Select System Info on the System screen to display the System Info screen. This screen displays the IP address for the controller, the version of the installed controller software, and the current language setting.

FIG. 21 System Info Screen

NOTE: English is currently the only language available. Additional languages can be selected from this screen as they become available.

Setting the System Peripherals

1. Select Peripherals on the System screen to display the System Peripherals screen. This screen is used to set behavior for the following peripherals if they exist in your system:

   - **Dump Valve** is used to relieve pressure following the completion of a test. It also relieves pressure when an alarm occurs or when the Stop button is pressed.

   - **Isolation Valve** is used to isolate the UUT (unit under test) or EUT (equipment under test) from the pump.

     NOTE: This is only used for pressure decay tests.

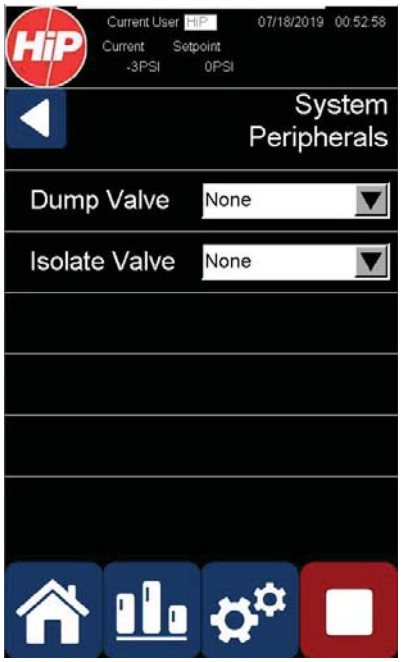

FIG. 22 System Peripherals Screen

2. Select one of the following settings from the Dump Valve and Isolate Valve menu lists:

   - **None** - This is selected if the valve does not exist in your system.
   - **Normally Open** - The valve is closed when air is applied.
   - **Normally Closed** - The valve is open when air is applied.

3. Press the Back button to return to the System screen.

Setting System Alarms

Select System Alarms on the System screen to display the System Alarms screen.

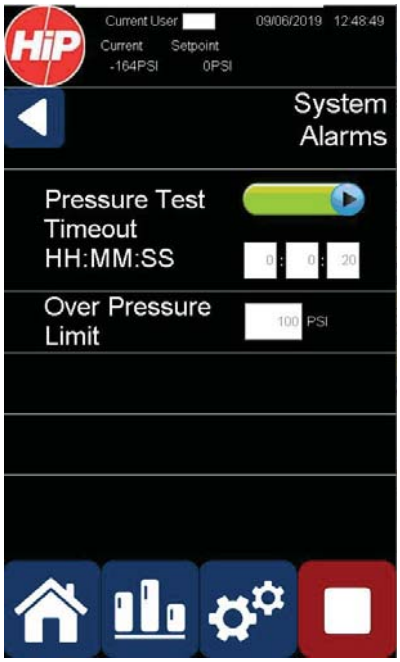

FIG. 23 System Alarms Screen

Pressure Test Timeout

If enabled, the system will trigger an alarm if it does not reach the pressure setpoint within the specified time.

Over Pressure Limit

To reduce the risk of skin injection and damage to the pump, set the overpressure limit to keep the maximum pressure attainable under the maximum working pressure of the pump. Refer to your pump's instruction manual for specifics.

This sets a maximum pressure allowed over the highest setpoint for a pressure test. Any pressure over the maximum pressure (the highest setpoint pressure plus the overpressure limit) will trigger an alarm and stop the test.

Example: A pressure test may include setpoints of 5000, 7000, and 10,000 PSI. If the overpressure limit is set to 500 PSI, the maximum pressure allowed during the pressure test is 10,500 PSI.

Setting System Parameters

Select System Parameters on the System screen to display the System Parameters screen. This screen allows you to set the gain for the system.

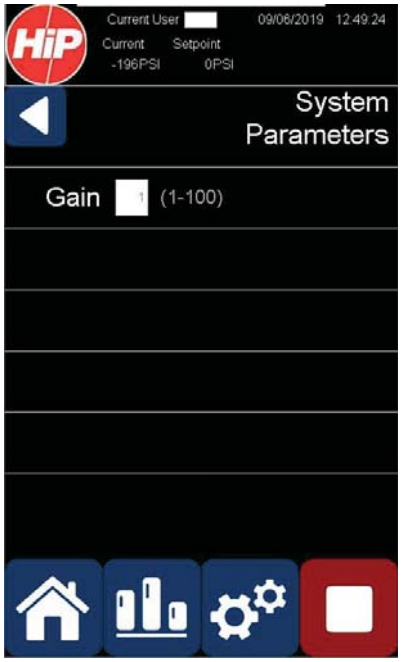

FIG. 24 System Alarms Screen

Gain

The gain determines how quickly the system builds pressure, with 1 being the slowest and 100 being the fastest.

NOTE: The factory default gain setting is 10. You need to adjust the gain up or down for your application to optimize speed and minimize pressure overshoot.

- A higher gain can cause larger overshoots when building target setpoints, which may affect test accuracy or over-pressurize components.
- A lower gain can increase the time it takes to build pressure when testing large volumes.

Run Screen Operations

Running a Test

1. Press the Run button to display the Run screen.

FIG. 25 Run Screen

2. Press the Test Selection menu field and select the desired test from the menu list. (See **Setting Up Pressure Tests** on page 18.)

3. If you are tracking tests by product, select the Serial No. field to display a keypad and enter the product's serial number. This number will be saved with the test result data.

4. Press the Start button to run the selected test. Once the Start button is pushed, it changes to a Stop button, which can be used to stop the pressure test at any time.

   The Pressure Trace Graph records the pressure output throughout the run of the test. This is saved with the test result data.

   The Status field displays the current status of the PT2020 controller.

   If an alarm is triggered during the test, it will appear in an Alarm popup window. Press the Acknowledge button to remove the popup window.

5. A Test Result popup window appears when the test is finished, indicating whether the "Test Passed" or the "Test Failed". Press the Acknowledge button to remove the popup window.

6. Follow the **Pressure Relief Procedure** on page 11.

7. Repeat steps 1 - 6 for each test.

File Management

Managing Pressure Test Results

Transferring Pressure Test Results

1. Insert a USB drive in the USB port (12) in the front cover.
2. Press the Settings button to display the Setup screen.
3. Select File Management to display the Files screen.

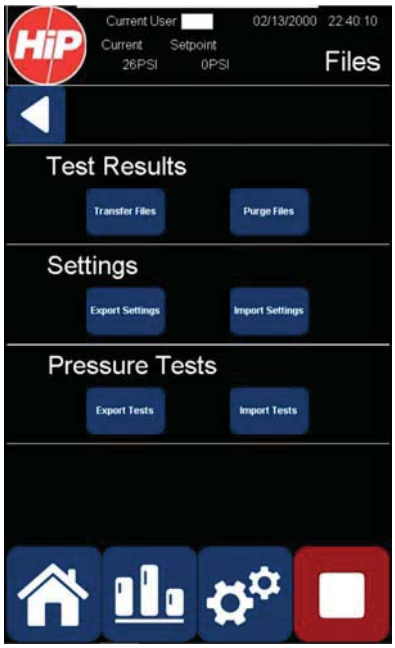

FIG. 26 Files Screen

4. Press the Test Results-->Transfer Files button to transfer all pressure test results to the USB drive.
5. Remove the USB drive from the USB port.

Purging Pressure Test Results

1. Press the Settings button to display the Setup screen.
2. Select File Management to display the Files screen.
3. Press the Test Results-->Purge Files button to delete all pressure test results from the PT2020 controller.

Transferring System Settings

Exporting System Settings

This is useful for saving current settings when updating the PT2020 software.

1. Insert a USB drive in the USB port (12) in the front cover.
2. Press the Settings button to display the Setup screen.
3. Select File Management to display the Files screen.
4. Press the Settings-->Export Settings button to transfer all system settings to the USB drive.
5. Remove the USB drive from the USB port.

Importing System Settings

This is useful for restoring saved settings after updating the PT2020 software.

1. Insert a USB drive in the USB port (12) in the front cover.
2. Press the Settings button to display the Setup screen.
3. Select File Management to display the Files screen.
4. Press the Settings-->Import Settings button to transfer system settings from the USB drive.
5. Remove the USB drive from the USB port.

Transferring Pressure Tests

Exporting Pressure Tests Settings

1. Insert a USB drive in the USB port (12) in the front cover.
2. Press the Settings button to display the Setup screen.
3. Select File Management to display the Files screen.
4. Press the Pressure Tests-->Export Tests button to transfer pressure test settings to the USB drive.
5. Remove the USB drive from the USB port.

Importing Pressure Tests Settings

1. Insert a USB drive in the USB port (12) in the front cover.
2. Press the Settings button to display the Setup screen.
3. Select File Management to display the Files screen.
4. Press the Pressure Tests-->Import Tests button to transfer pressure test settings from the USB drive.
5. Remove the USB drive from the USB port.

Locating Test Data via FTP Client

1. Connect your PC to the PT2020 with an Ethernet cable.
2. Open an FTP client on your PC.
3. Enter the following in the FTP client:
   - IP Address - This is found on the System Info screen (see **Verifying the System Information** on page 21). The default is “169.254.0.1”.
   - Username - “guest”
   - Password - “guest”
4. All test data is stored in the Test Results folder.

Troubleshooting

1. Follow **Pressure Relief Procedure**, page 11, before checking or repairing pump.
2. Turn the disconnect switch (8) to the OFF position.
3. Disconnect the PT2020 from the AC outlet.
4. Check all possible problems and causes before disassembling pump.
5. Reconnect the PT2020 to the AC outlet after troubleshooting.
6. Turn the disconnect switch (8) to the ON position.

Alarm	Trigger Condition	Return to Standby Condition	Solution
I/O Fault	Whenever the PLC cannot communicate with the I/O cards. The I/O cards control the communication to the sensors and items being controlled.	Once all I/O is detected and user acknowledges the alarm.	Check the Ethernet cable that connects the PLC to the I/O cards and reseat the connections, if necessary.
			Contact Graco Tech Assistance.
No Transducer	Whenever the 4-20 mA signal is not in range.	Once the alarm is acknowledged and the transducer is detected.	Verify the transducer is properly connected by reseating the cable connections.
			Contact Graco Tech Assistance.
Pressure Test Failed	Interaction failed by user, or pressure decay failed.	Once alarm is acknowledged and pressure is relieved.	Determine what caused the test to fail and rerun the test.
Over Pressure	Pressure went above the maximum test pressure + the over pressure allowed threshold.	Once the alarm is acknowledged and pressure is relieved.	Check for leaks in the system.
			Lower the gain setting.
			Increase the over pressure threshold if safe to do so.
Test Unsafe	A test to be run would result in the pressure transducer being over pressured.	Once the alarm is acknowledged.	Pick a different pressure test to run.
			Verify the transducer matches the transducer selected on the Transducer screen.
			Use a transducer that is properly sized for the pressure test.
Unable to Build Pressure	The Pressure Test Timeout timer expires before the setpoint pressure is reached.	Once the alarm is acknowledged and pressure is relieved.	Check for any reason the system is not building pressure.
			Increase the time on the Pressure Test Timeout timer.
			Increase air supply pressure.

Alarm	Trigger Condition	Return to Standby Condition	Solution
Test Unachievable	A test to be run is over the maximum pressure of the pump.	Once the alarm is acknowledged.	Pick a different pressure test to run.
			Verify the pump running the test matches settings on the Pump screen.
			Use the proper pump for the test.
Leak Detected	When the pressure drops below 90% of the setpoint for 5 seconds when doing a pressure hold test.	Once the alarm is acknowledged and pressure is relieved.	Check for leaks in the system.

Optimizing Performance

Observed Behavior	Correction
Pressure builds too slowly	Verify the pump ratio matches the pump's specifications.
	Increase the gain setting. See **Setting System Parameters**, page 22.
Pressure overshoots target	Verify the pump ratio matches the pump's specifications.
	Decrease the gain setting. See **Setting System Parameters**, page 22.

Viewing Alarm Events

1. Press the Settings button to display the Setup screen.
2. Select Alarm Log to display the Alarm Log screen. Alarm events are listed in the order they occurred.

FIG. 27 Alarm Log Screen

Repair

Replacing the Transducer

See **Kits and Accessories**, on page 25, for transducer kit numbers.

1. Follow the **Pressure Relief Procedure** on page 11.
2. Turn the disconnect switch (8) to the OFF position.
3. Disconnect the transducer cable (R) from the transducer (S). (See FIG. 1 on page 8.)
4. Replace the transducer (S) near the pump's outlet port (M).
5. Connect the transducer cable (R) to the new transducer (S).
6. Turn the disconnect switch (8) to the ON position.

Replacing the Electronic Air Regulator

See **Kits and Accessories**, on page 25, for air regulator kit numbers.

1. Follow the **Pressure Relief Procedure** on page 11.
2. Turn the disconnect switch (8) to the OFF position.
3. Disconnect the PT2020 from the AC outlet.
4. Open the enclosure.

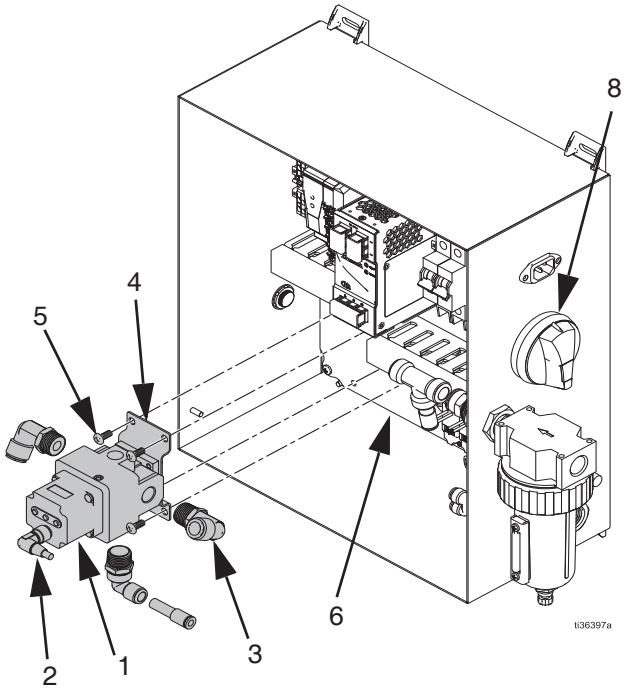

FIG. 28 Replace the Regulator

5. Remove the M12 cable (2) from the top of the air regulator (1).
6. Disconnect the hoses and fittings (3) from the sides of the air regulator (1).
7. Loosen the four screws (5) on the base (4) of the air regulator (1) to remove the regulator assembly from the backplate (6) of the enclosure.
8. Install the fittings (3) to the new regulator
9. Use the included screws to attach the new air regulator (1) to the included base (4).
10. Use the included screws (5) to attach the regulator assembly to the backplate (6) of the enclosure.
11. Connect the hoses (3) to the sides of the air regulator (1).
12. Attach the M12 cable (2) to the top of the air regulator (1).
13. Close the enclosure.
14. Reconnect power to the controller.

Parts

PT2020 Enclosure

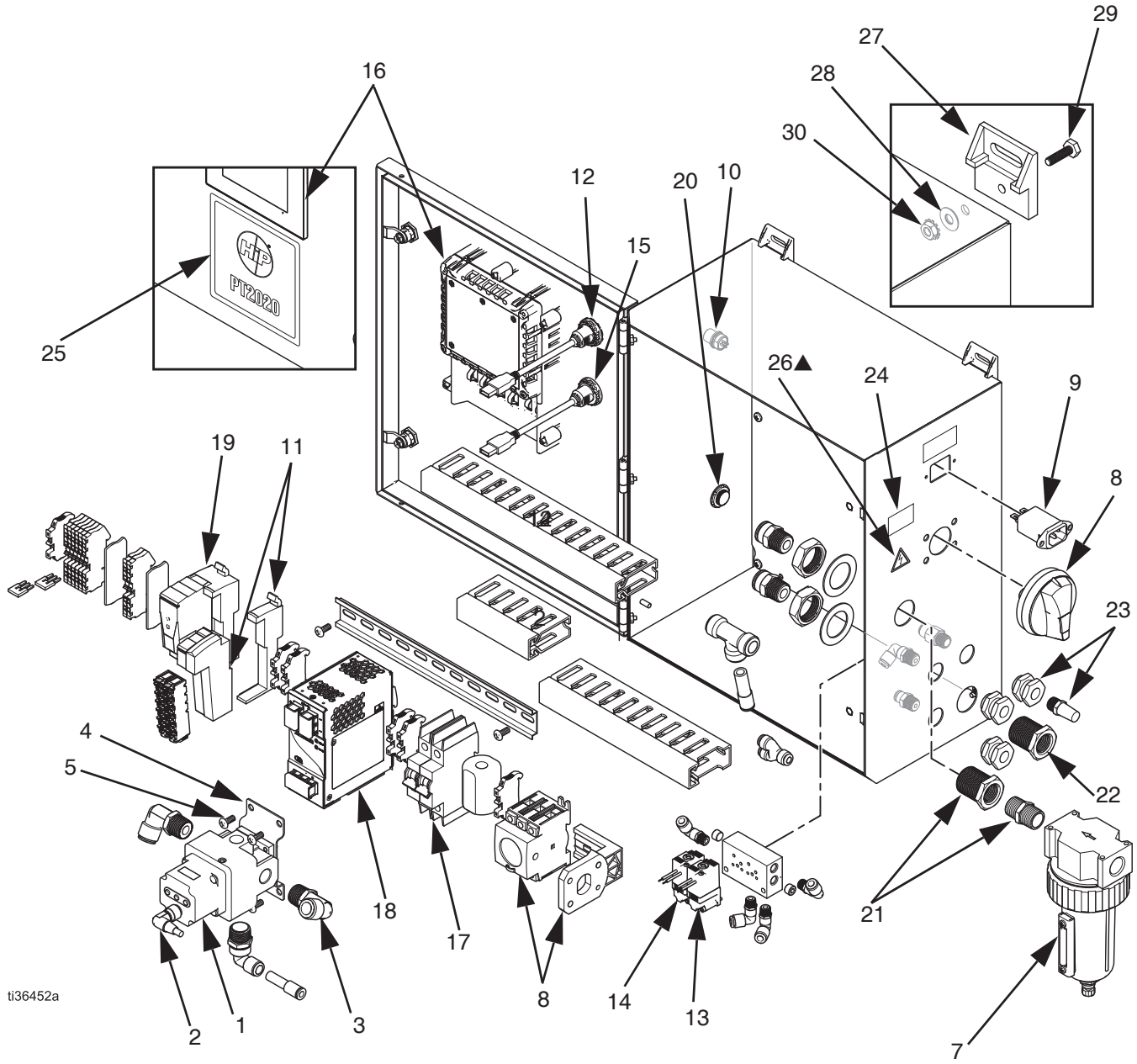

PT2020 Enclosure Parts List

Ref.	Part	Description	Qty
1	19A836	Electronic air regulator	1
2		M12 cable connection	1
3		Pneumatic hose connection	3
4		Regulator base	1
5		Base screws	4
6		Backplate	1
7	106149	Filter	1
8		Disconnect switch assembly	1
9		Power cable connection	1
10		Pressure transducer connection	1
11		I/O card modules	2
12		USB port	1
13		Isolate valve air solenoid	1
14		Pressure release valve air solenoid	1
15		Ethernet port	1
16		Controller	1
17		Circuit breaker	2
18		Power supply	1
19		Communication card	1
20		Vent	1
21		Inlet port	1
22		Outlet port	1
23		Exhaust port	1
24		Assembly label	1
25		Branding label	1
26▲	15G303	Electrical warning label	1
27		Mounting foot	4
28		Sealing washer	4
29		Bolt	4
30		Nut	4

▲ *Replacement safety labels, tags, and cards are available at no cost.*

Kits and Accessories

Part Number	Description
26C600	Enclosure, PT2020, 1 Pump
19A837	Transducer, 10 ksi
25D654	Transducer, 25 ksi
25D655	Transducer, 40 ksi
19A838	Transducer, 60 ksi
19A839	Transducer, 75 ksi
19A841	Pressure Transducer Cable; all transducers except 75 ksi
19A874	Pressure Transducer Cable; 75 ksi transducer only
106149	Filter Kit
17B708	Air Filter Element
121057	Cord Set, UK
121056	Cord Set, Europe
121055	Cord Set, USA
124864	Cord Set, AUS
19A869	Transducer Kit, 10 ksi; with cable
19A870	Transducer Kit, 25 ksi; with cable
19A871	Transducer Kit, 40 ksi; with cable
19A872	Transducer Kit, 60 ksi; with cable
19A873	Transducer Kit, 75 ksi; with cable

Dimensions

PT2020 Controller

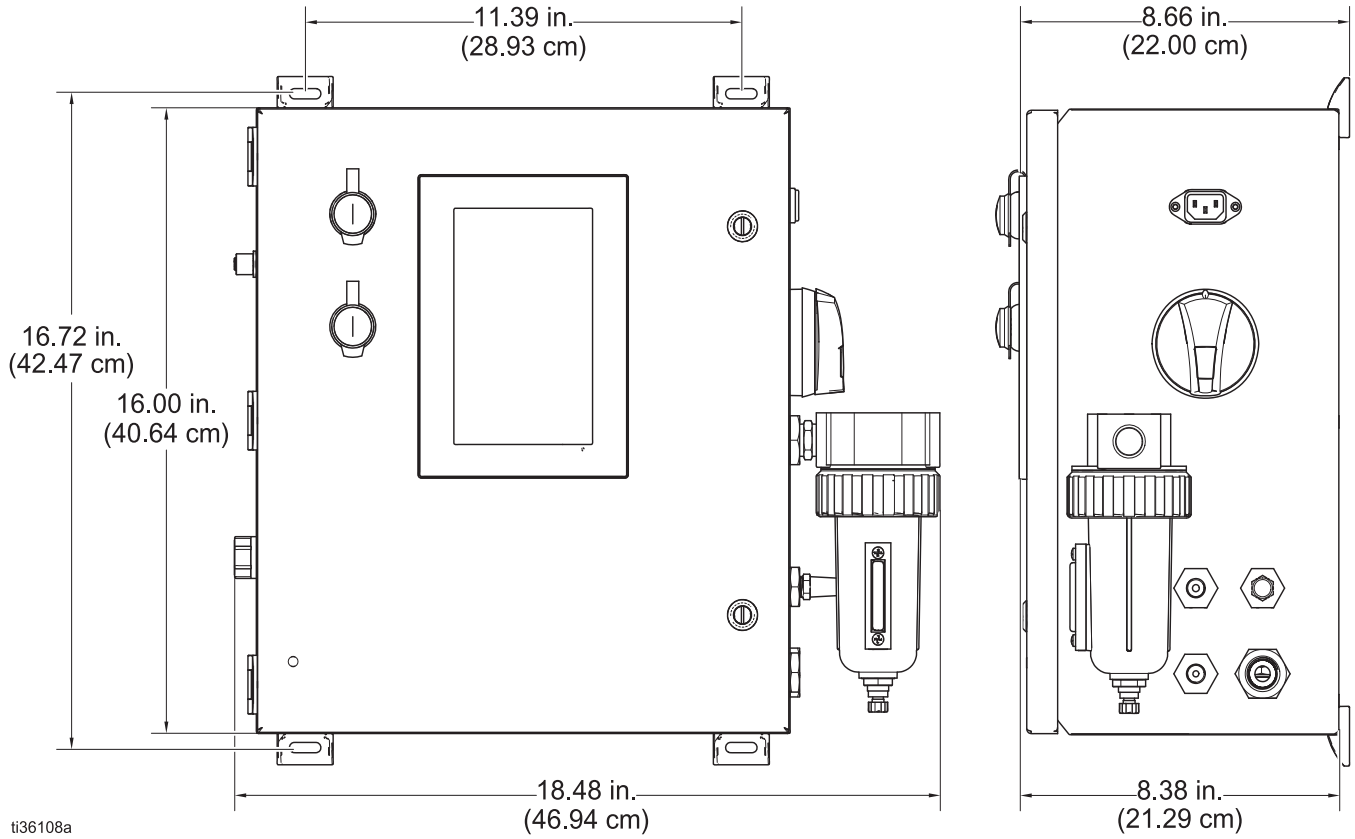

FIG. 29 PT2020 Controller Dimensions and Mounting Slots

Technical Specifications

PT2020 Programmable Pneumatic Pump Controller		
	US	**Metric**
Nominal Input Voltage	100 - 240 VAC; 50/60 Hz; 1 Phase	
Maximum Input Current	2 A	
Maximum Air Inlet Pressure	145.0 PSI (1 MPa, 10.0 bar)	
Maximum Air Outlet Pressure	130.5 PSI (0.9 MPa, 9.0 bar)	
Dump Valve Pressure	145.0 PSI (1 MPa, 10.0 bar)	
Isolation Valve Pressure	145.0 PSI (1 MPa, 10.0 bar)	
Pneumatic Inlet Size	1/2 in. npt(f)	
Pneumatic Outlet Size	1/2 in. npt(f)	
Transducer Connection Sizes		
10 K	1/4 in. npt(m)	
25 K	HM4	
40 K	HF4	
60 K	HF4	
75 K	HF4	
Operating Temperature Range	32° - 104° F	0° - 40° C
Overall Dimensions (L x W x H)	16.00 in x 18.48 in. x 8.38 in.	40.64 cm x 46.94 cm x 21.29 cm
Weight		
Enclosure	30.0 lbs	13.6 kg

Graco High Pressure Equipment Company Standard Warranty

Graco High Pressure Equipment Company warrants all equipment referenced in this document which is manufactured by Graco High Pressure Equipment Company and bearing its name to be free from defects in material and workmanship on the date of sale to the original purchaser for use. With the exception of any special, extended, or limited warranty published by Graco High Pressure Equipment Company, Graco High Pressure Equipment Company will, for a period of twelve months from the date of sale, repair or replace any part of the equipment determined by Graco High Pressure Equipment Company to be defective. This warranty applies only when the equipment is installed, operated and maintained in accordance with Graco High Pressure Equipment Company's written recommendations.

This warranty does not cover, and Graco High Pressure Equipment Company shall not be liable for general wear and tear, or any malfunction, damage or wear caused by faulty installation, misapplication, abrasion, corrosion, inadequate or improper maintenance, negligence, accident, tampering, or substitution of non-Graco High Pressure Equipment Company component parts. Nor shall Graco High Pressure Equipment Company be liable for malfunction, damage or wear caused by the incompatibility of Graco High Pressure Equipment Company equipment with structures, accessories, equipment or materials not supplied by Graco High Pressure Equipment Company, or the improper design, manufacture, installation, operation or maintenance of structures, accessories, equipment or materials not supplied by Graco High Pressure Equipment Company.

This warranty is conditioned upon the prepaid return of the equipment claimed to be defective to an authorized Graco High Pressure Equipment Company distributor for verification of the claimed defect. If the claimed defect is verified, Graco High Pressure Equipment Company will repair or replace free of charge any defective parts. The equipment will be returned to the original purchaser transportation prepaid. If inspection of the equipment does not disclose any defect in material or workmanship, repairs will be made at a reasonable charge, which charges may include the costs of parts, labor, and transportation.

THIS WARRANTY IS EXCLUSIVE, AND IS IN LIEU OF ANY OTHER WARRANTIES, EXPRESS OR IMPLIED, INCLUDING BUT NOT LIMITED TO WARRANTY OF MERCHANTABILITY OR WARRANTY OF FITNESS FOR A PARTICULAR PURPOSE.

Graco High Pressure Equipment Company's sole obligation and buyer's sole remedy for any breach of warranty shall be as set forth above. The buyer agrees that no other remedy (including, but not limited to, incidental or consequential damages for lost profits, lost sales, injury to person or property, or any other incidental or consequential loss) shall be available. Any action for breach of warranty must be brought within two (2) years of the date of sale.

GRACO HIGH PRESSURE EQUIPMENT COMPANY MAKES NO WARRANTY, AND DISCLAIMS ALL IMPLIED WARRANTIES OF MERCHANTABILITY AND FITNESS FOR A PARTICULAR PURPOSE, IN CONNECTION WITH ACCESSORIES, EQUIPMENT, MATERIALS OR COMPONENTS SOLD BUT NOT MANUFACTURED BY GRACO HIGH PRESSURE EQUIPMENT COMPANY. These items sold, but not manufactured by Graco High Pressure Equipment Company (such as electric motors, switches, hose, etc.), are subject to the warranty, if any, of their manufacturer. Graco High Pressure Equipment Company will provide purchaser with reasonable assistance in making any claim for breach of these warranties.

In no event will Graco High Pressure Equipment Company be liable for indirect, incidental, special or consequential damages resulting from Graco High Pressure Equipment Company supplying equipment hereunder, or the furnishing, performance, or use of any products or other goods sold hereto, whether due to a breach of contract, breach of warranty, the negligence of Graco High Pressure Equipment Company, or otherwise.

FOR GRACO HIGH PRESSURE EQUIPMENT COMPANY CANADA CUSTOMERS
The Parties acknowledge that they have required that the present document, as well as all documents, notices and legal proceedings entered into, given or instituted pursuant hereto or relating directly or indirectly hereto, be drawn up in English. Les parties reconnaissent avoir convenu que la rédaction du présente document sera en Anglais, ainsi que tous documents, avis et procédures judiciaires exécutés, donnés ou intentés, à la suite de ou en rapport, directement ou indirectement, avec les procédures concernées.

Graco High Pressure Equipment Company Information

For the latest information about Graco High Pressure Equipment Company products, visit www.highpressure.com.

TO PLACE AN ORDER, contact your Graco High Pressure Equipment Company distributor or call to identify the nearest distributor.
Toll Free: 1-800-289-7447 **Fax:** 814-838-6075

All written and visual data contained in this document reflects the latest product information available at the time of publication. Graco reserves the right to make changes at any time without notice.

Original instructions. This manual contains English. MM 3A6828
Graco Headquarters: Minneapolis
International Offices: Belgium, China, Japan, Korea

GRACO HIGH PRESSURE EQUIPMENT CO. • 2955 West 17th Street • ERIE PA 16305 • USA

www.highpressure.com
Revision B, 9/2019